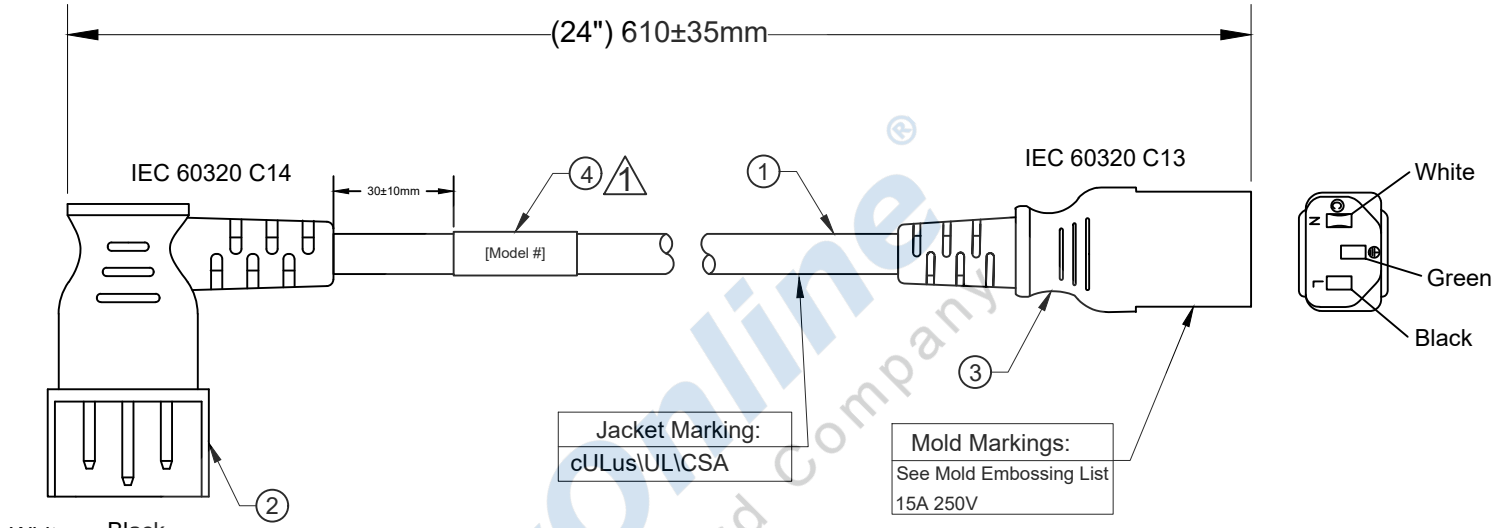

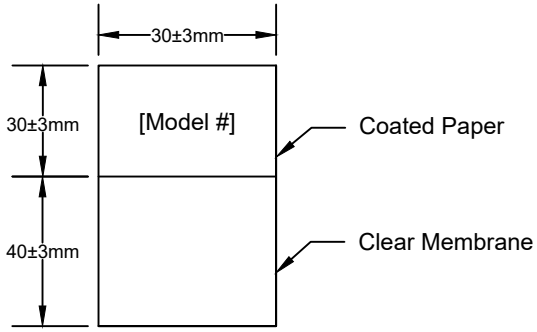

This cord may or may not have one or more labels. If labeled, they may be imprinted or on a sticker and may include (but is not limited to) one of the listed model number(s), length, rating or a combination of these.

Packing: Bundled to Ease Installation

No.	Specification	QTY	Remarks
1	SJT 14/3c 105°C Black	1 PC	
2	Plug IEC 60320 C14 Black Angled Right	1 PC	
3	Connector IEC 60320 C13 Black	1 PC	
4	LABEL: (40+30) * 30 mm	1 PC	

Mold Embossing List

Vendor File #	
Xuanhua	E313867
Xuanhua	E257089
Power Fig	E250704
Power Fig	E502504
StayOnline	E250704
StayOnline	E502504
Yung Li	E152635
Yung Li	E241374
SSEMCO	E340286
Scolmore	E361125
Volex	E62405
Well Shin	E115330
King Cord	E85554
MSL Enterprises	E210037
Guang Zhou Co Ltd	E318430
Kalee MFG	E31793

Tolerances

> 0 ± 0.30 mm
>1.0 ± 0.50 mm
>10.0 ± 1.0 mm
>20.0 ± 2.0 mm

Angle: ± 1°

Approved		Date		StayOnline®			
Checked		Date		Customer			
Drawn	GAC	Date	17JUL2026	Model #	PFC14R14E24		
Item No.	5246			Material	PVC	Units	mm
Drawing No.	5246	Rev.	C	Scale			

StayOnline® The Power Cord Company